Mopec®

Better By Design™

MOPEC 5000™ AUTOPSY SAW

User Manual

INSTRUCTIONS FOR YOUR SAFETY

Please read carefully and retain for future reference. It is a requirement of IEC/EN 60601-1 that these instructions are made available to the operator and qualified maintenance staff at all times.

The Mopec 5000 System has been examined and found to be in compliance with the standard for Medical Electrical Equipment IEC/EN60601-1

NOTE: Failure to use spring washer or over-tightening of retaining screw will cause blade to not seat properly and saw to not operate properly.

CE 93/42/EEC
IEC/EN 60601-1
EMC 2004/108/EC

CONTENTS

Foreword	2
Equipment Classification	2
Safety and Warnings	3
General Description	4
Sequence of Operation	4
Mopec 5000 Saw Unit	5
Mopec 5000 Power Supply - Portable	6
Mopec 5000 Vacuum Unit	7
Fitting Accessories and Detachable Parts	8
Preventive Maintenance And Inspection	8
Mopec 5000 Fuse Replacement	9
Mopec 5000 Power Supply	9
Troubleshooting	10-11
Cutting Hints	12
Disinfection and Sterilization	12
Accessories and Detachable Parts	13
Schematic Wiring Diagram	14
Filter Service Record	15
Conditions of Warranty	16
Electrical Test Certificate	16
Equipment Ratings	16

FOREWORD

When not in use or during maintenance always isolate the equipment from the electrical supply.

PREPARATION FOR USE

Unpack and check equipment against the delivery note.

Check the details on the equipment rating label conform to your electrical supply.

For assembly instructions please refer to page 3.

IMPORTANT. THIS EQUIPMENT MUST BE GROUNDED.

The wires in the mains lead of this equipment are colored in accordance with the following code:

	110v -120v	240v
GROUND	**Green**	**Green + Yellow**
NEUTRAL	**White**	**Blue**
LIVE	**Black**	**Brown**

EQUIPMENT CLASSIFICATION

Type B Equipment - Protection against electrical shock

Saw Unit Watertight Equipment IP67

Power Supply Splash Proof Equipment IP65

Mode of Operation:-
Continuous with Intermittent Loading up to 3 mins. Duty Cycle 50%

Environmental conditions for transport and storage.

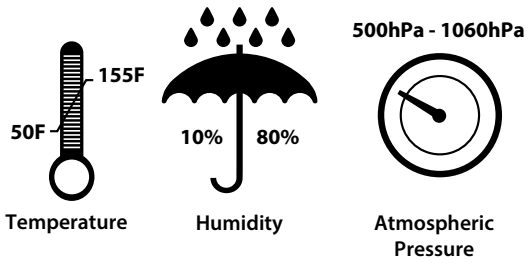

SAFETY AND WARNINGS

1 This equipment must be grounded before use.

2 Trained personnel must only use this product.

3. Please read all the instructions before use.

4 Check all equipment before use.

5 Use the appropriate safety equipment.

6 Do not immerse the Power Supply and Vacuum unit in Liquid

7 Use good quality disinfectants as approved by the Hospital Infection Control.

8 Do not use corrosive cleaning materials or Hypochlorite as these will damage the units.

9 Do not leave the Hand Piece soaking in cleaner for prolonged periods of time as will cause an ingress of fluid.

Note: -

Failure to use spring washer or over-tightening of retaining screw will cause blade to not seat properly and saw to not operate properly.

GENERAL DESCRIPTION

The Mopec 5000 Oscillating Saw has been developed to help minimize the risk of cross infection in sensitive areas, providing it is used in accordance with the manufacturer's instructions.

The complete system comprises three basic units.

THE SAW UNIT

This unit is fed from the power supply. It is hermetically sealed allowing disinfection and appropriate sterilization without dismantling. The enclosed motor cannot become contami-nated , consequently there is no hazardous aerosol effect. All external materials used in its construction are non-corrosive.

User preference may require the equipment to be supplied in its basic form which comprises the saw unit and power supply only. A filtration unit may be easily added by the customer at a later stage.

The complete Mopec 5000 system is capable of handling health endangering dusts, making it suitable for use in hospitals and industrial environments where the collection and disposal of such debris is subject to stringent control.

This equipment is not suitable for use in an environment where an explosion risk is present.

The equipment should only be moved by using the handle provided and never by pulling on the saw unit or power cable.

THE POWER SUPPLY

This unit is fed from the power supply and in turn delivers the appropriate electrical cur-rents to the saw unit and the vacuum filtration unit. The complete system is activated by the momentary switch on the saw unit. An intelligent current limiting device (which resets itself automatically) is incorporated in the power supply to prevent overload usage of the saw unit. This unit is watertight.

THE FILTRATION UNIT (Optional)

This unit is fed from the power supply. It gives highly efficient three stage filtration by way of a paper filter, cloth filter and highly efficient cartridge filter (Hepa filter) respectively. It is quite capable of filtering dry and partially damp material but must never be used to extract liquids. **This unit is not watertight and not designed for liquid extraction.**

SEQUENCE OF OPERATION

Warning: This equipment is designed for use by properly trained personnel only.

Mopec accepts no liability whatsoever for inappropriate or untrained usage.

1 Plug equipment into appropriate power source. Check Mains On indicator on power supply is lit.
2 With saw firmly in hand, depress and release the on/off button.
The complete system will then start.
3 Depress and release the on/off button once again and the system will then stop.
4 Always disconnect the equipment from the power outlet when not in use.

The Mopec 5000 is designed for highly efficient cutting, excessive pressure will slow cutting speed and may cause the system to shut down due to overload or blow fuse.

MOPEC 5000 SAW UNIT

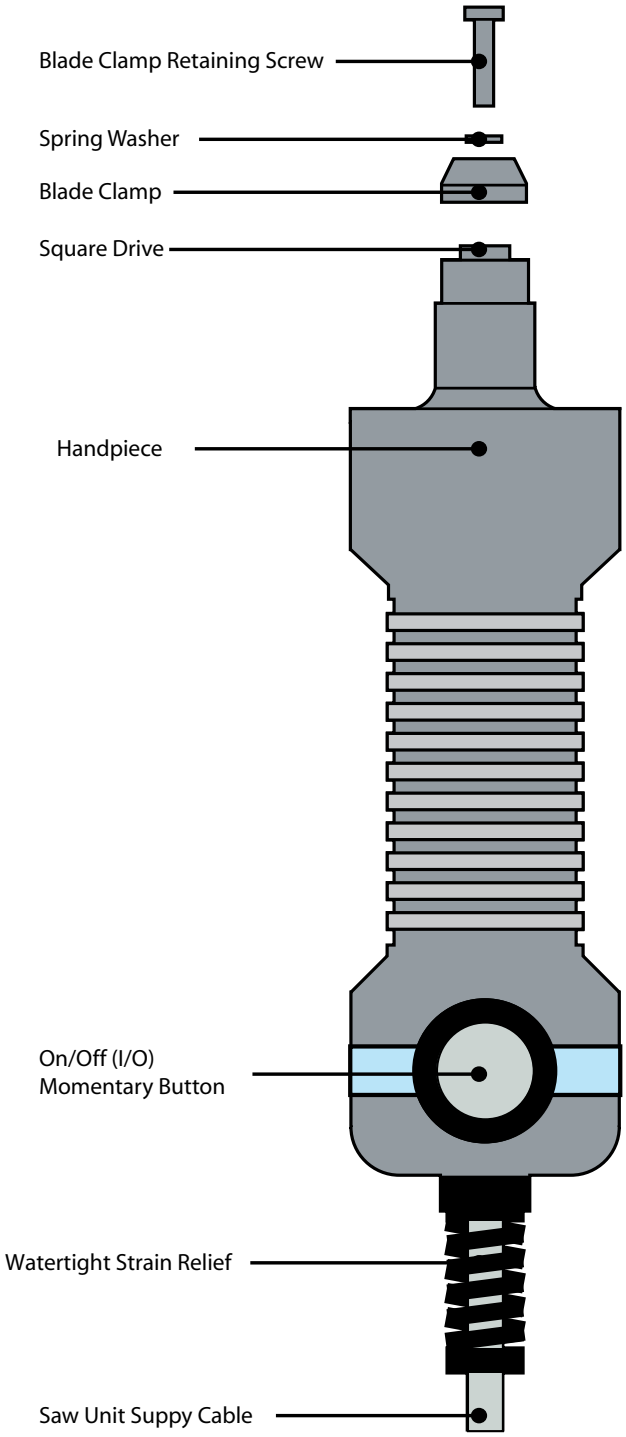

MOPEC 5000 Autopsy Saw Power Supply - Portable

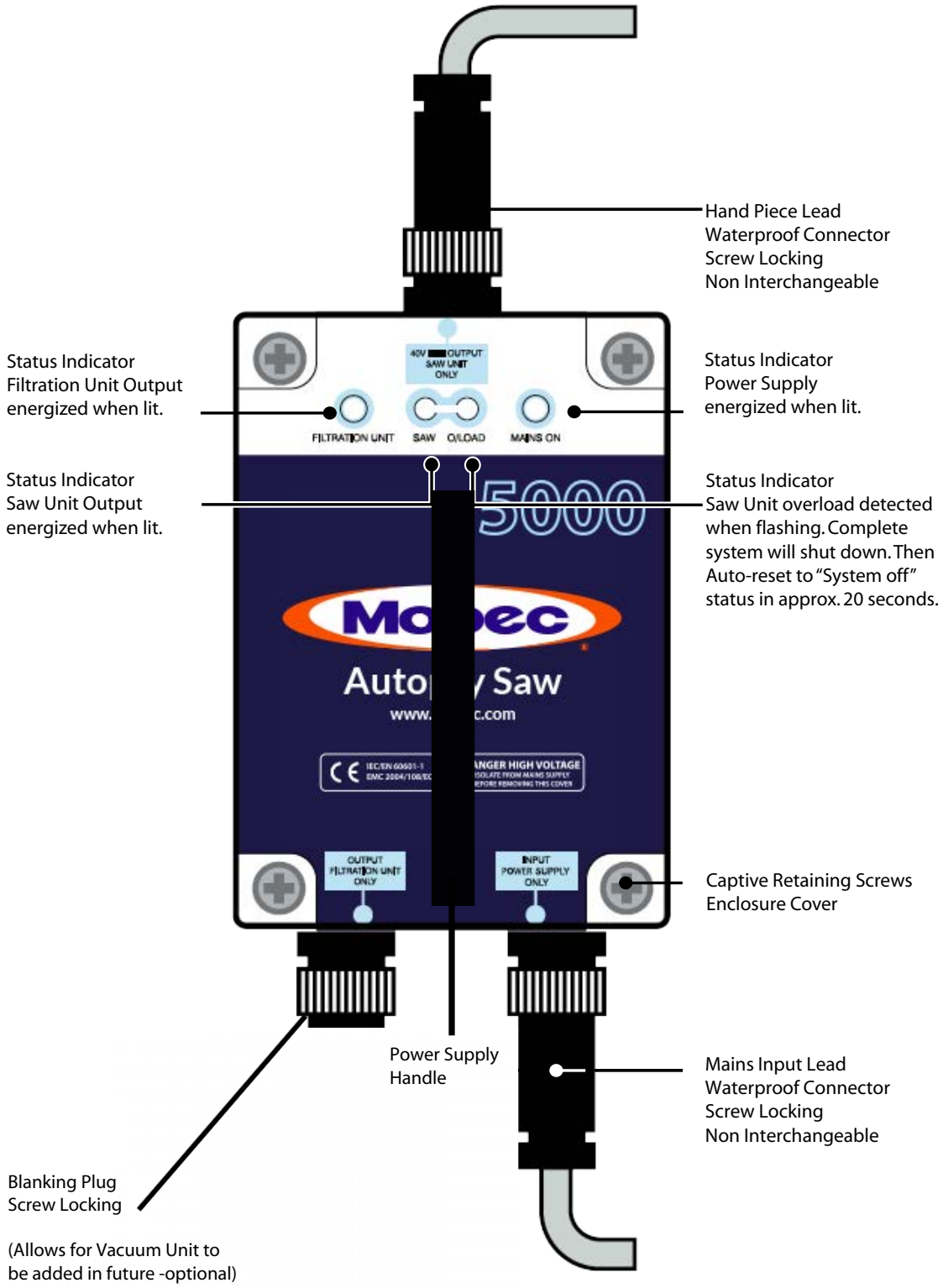

MOPEC 5000 Autopsy Saw Vacuum Unit **Optional**

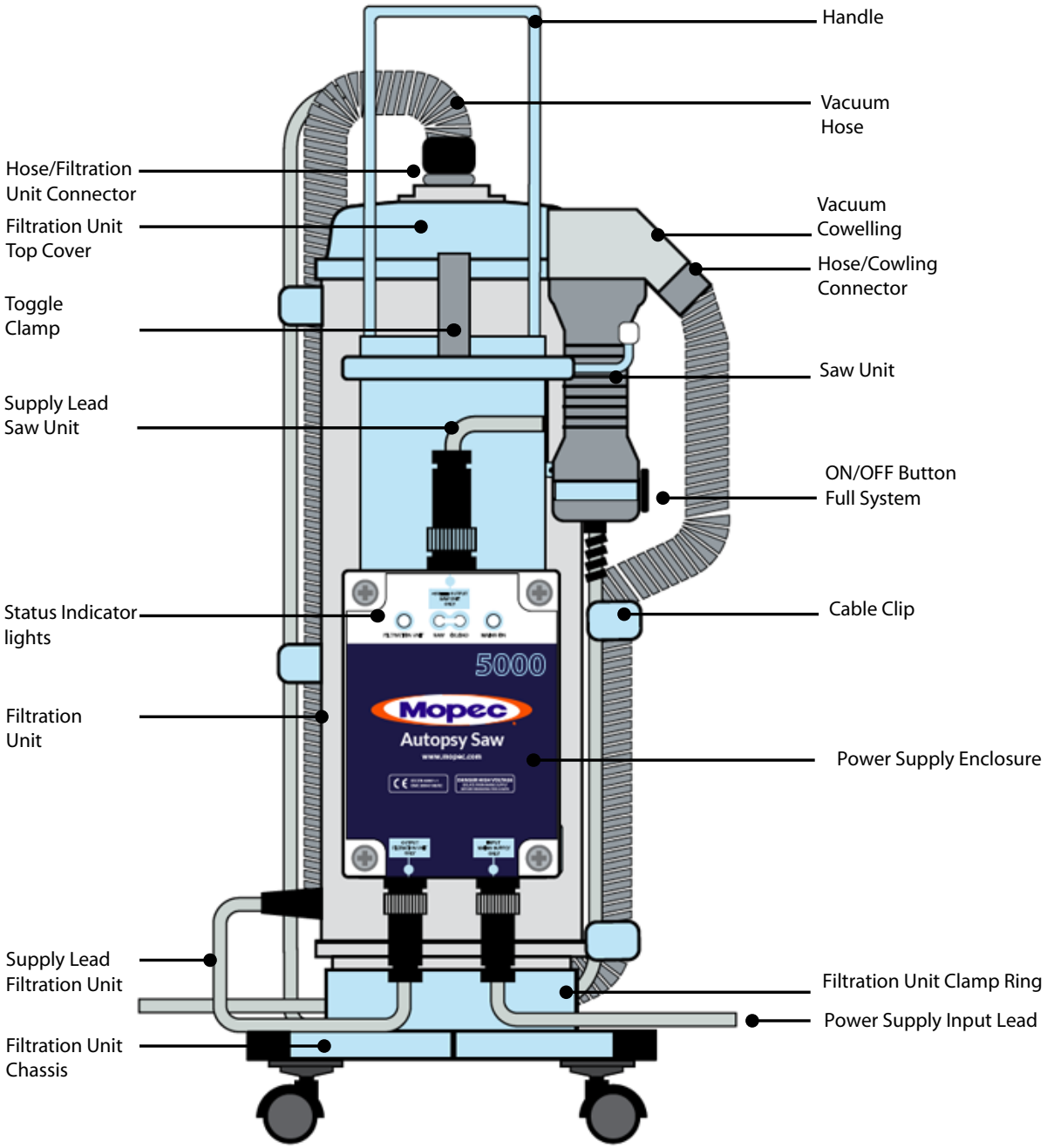

FITTING OF ACCESSORIES AND DETACHABLE PARTS

BLADE REPLACEMENT

1 Unscrew blade clamp retaining screw with nutwrench provided and remove retaining screw, spring washer and blade clamp.
2 Replace or index blade as required, ensuring it is seated properly on the square drive shaft. If not, discard, or resulting damage or inefficiency of the saw could result.
3 Refit blade clamp, spring washer and retaining screw. **Note !** It is imperative the spring washer is in place or the blade may loosen while in use.
4 Firmly retighten clamp retaining screw with nutwrench provided. **Note ! Do not overtighten, as this will cause blade to seat improperly and prevent the saw from operating properly.**

PREVENTIVE MAINTENANCE AND INSPECTION

THE EQUIPMENT SHOULD BE DISCONNECTED FROM THE ELECTRICAL SUPPLY WHILE THE FOLLOWING TASKS ARE BEING PERFORMED.

THE SAW UNIT

Daily
Clean thoroughly with recommended disinfectant using soft nylon brush, not wire or hard bristle type. Rinse down and dry thoroughly.

Weekly
Lubricate retaining screw, blade clamp and square drive with light engineering or silicone based grease. Graphite based grease is not recommended. Inspect equipment for signs of damage.

Annually
Full service of Saw Unit is strongly recommended. **Note!** If the saw unit is still within it's **one year warranty period**, it can only be serviced or repaired by Mopec. or their appointed agent. **Service performed by any other party, will invalidate the warranty.**

THE POWER SUPPLY

Weekly
Clean thoroughly with recommended disinfectant using soft damp cloth. Dry thoroughly and inspect for damage and ill fitting connections

TROUBLESHOOTING

The information contained in this section covers common problems and suggests solutions. If your system's problem is not covered here, or you still need help, please contact the agent/manufacturer.

Note. Disconnect equipment from the power supply electrical supply before attempting to implement any solutions of an electrical nature

Symptom	Possible Cause	Solution
System does not start.	Power supply indicator not lit. Fuse blown. Bad connection.	Check main plug fuse. Check power supply fuses. Check all electrical connectors are mated correctly.
Fuses blow repeatedly.	Incorrect supply voltage. Filtration unit has been used to extract liquids.	Check equipment rated voltage is comptabile with the electrical supply. Disconnect filtration unit connector from the power supply. If fuses do not blow when saw unit is switched on then the filtration unit is defective.
System shuts down.	Overload indicator is on. Faulty connection.	Wait until yellow overload indicator is off (approx 20 seconds) and retry. Check connections for the saw unit and filtration unit are engaged correctly with the power supply.
System shuts down repeatedly.	Overload indicator is on. Distorted blade. Blunt blade. Incorrect fitted blade. Excessive pressure on workpiece.	Discard blade immediately. Index blade so new portion comes in contact with the workplace. Check blade is fitted in accordance with the manufacturer's instructions. See page 8. See cutting hints.

TROUBLESHOOTING- continued

Symptom	Possible Cause	Solution
Saw unit status indicator lit but not running although filtration unit does.	Faulty connection. Defective motor.	Check the power supply connection is properly engaged. Contact manufacturer.
Excessive noise from saw unit.	Distorted blade. Badly fitting or loose blade. Bearing service required.	Replace blade. Check blade is fitted in accordance with the manufacturers instructions. Contact manufacturer.

FUSE REPLACEMENT

ISOLATE FROM ELECTRICAL SUPPLY BEFORE REMOVING COVER

The two power supply fuses are located on the underside of the board in the position shown.

The third fuse is an anti surge fuse. Fuse type and ratings are marked adjacent to the fuse holders or alternatively see page 14.
Undo the four captive retaining screws to remove the cover.
Prior to replacement ensure that the rubber seal set into the underside cover has not been disturbed.

Retighten cover fully ensuring that the cover is seated properly.

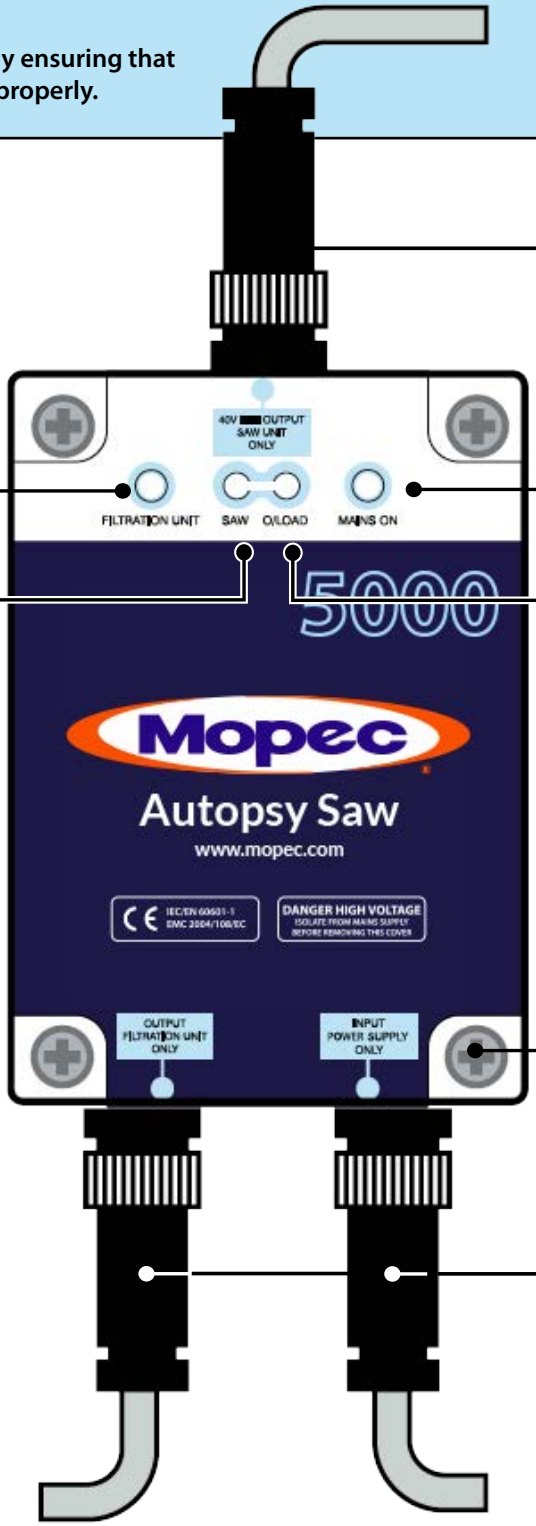

Waterproof Electrical Connector Screw Locking-Non Interchangeable

Status Indicator Filtration Unit Output energized when lit.

Status Indicator Power Supply energized when lit.

Status Indicator Saw Unit Output energized when lit.

Status Indicator Saw Unit overload detected when flashing. Complete system will shut down. Then Auto-reset to "System off" status in approx. 20 seconds.

Captive Retaining Screws Enclosure Cover

Waterproof Electrical Connectors Screw Locking-Non Interchangeable

CUTTING HINTS

The Mopec 5000 oscillating saw has been designed and constructed to provide effortless and highly efficient cutting in its appropriate areas of usage. We suggest a trial cutting period applying the least pressure possible to the workpiece until fully accustomed with the efficiency. Excessive pressure is not required as this will reduce the speed of cut.

If you experience difficulty then consult the Troubleshooting Causes and Solutions on pages 10 and 11.

Suitable safety protection must be worn at all times during cutting.

DISINFECTION AND STERILIZATION

The saw unit only is capable of withstanding temperatures between - 4 degrees F to +150 degrees F. This must be born in mind when considering a disinfection or sterilization method.

Autoclaving of this equipment is not recommended.

Only use cleaning agents that are safe for use on metals. We do not recommend the use of Hypochlorite or corrosive cleaners as possible corrosion could result.

We advise gentle scrubbing with a soft non metallic brush, rinsing with clean water and drying where necessary. Do not direct high pressure water jets at any part of the equipment, this could invalidate the warranty.

All cleaning agents should be mixed, stored and applied according to the manufacturers instructions.

We suggest a non-caustic disinfectant such as **BE045 SaniPath Disinfectant Foaming Spray** or **BE047 SaniPath Disinfecting Spray Cleaner** for cleaning purposes. We recommend you **NOT USE** a bleach solution to clean your unit.

ACCESSORIES AND DETACHABLE PARTS

Order Code	Description
BD090	110V -120V Saw & Power Supply
BD091	110V-120V Power Supply
BD092	Hand Piece
BD093	Bone Dust Collector 115V 240V
BD094	Saw and Power Supply 240V Bone
BD095	Dust Collector Filter Service Kit
BD097	2" Segmented Blade
BD140 (2")	2.5" Circular Blade
BD141 (2.5")	2.5" Segmented Blade
BD142 (2.5")	3" Circular Blade
BD143 (3")	Nut Driver
BD144	Depth Gauge 64mm
BD145	Depth Gauge 76mm Flexible Hood
BD146	(10 pack) Vacuum pipe with QR
BD147	fittings Paper filters pack of 50
BD148	Cloth filter
BD149	Micron filter
BD150	
BD151	

MOPEC 5000 SCHEMATIC WIRING

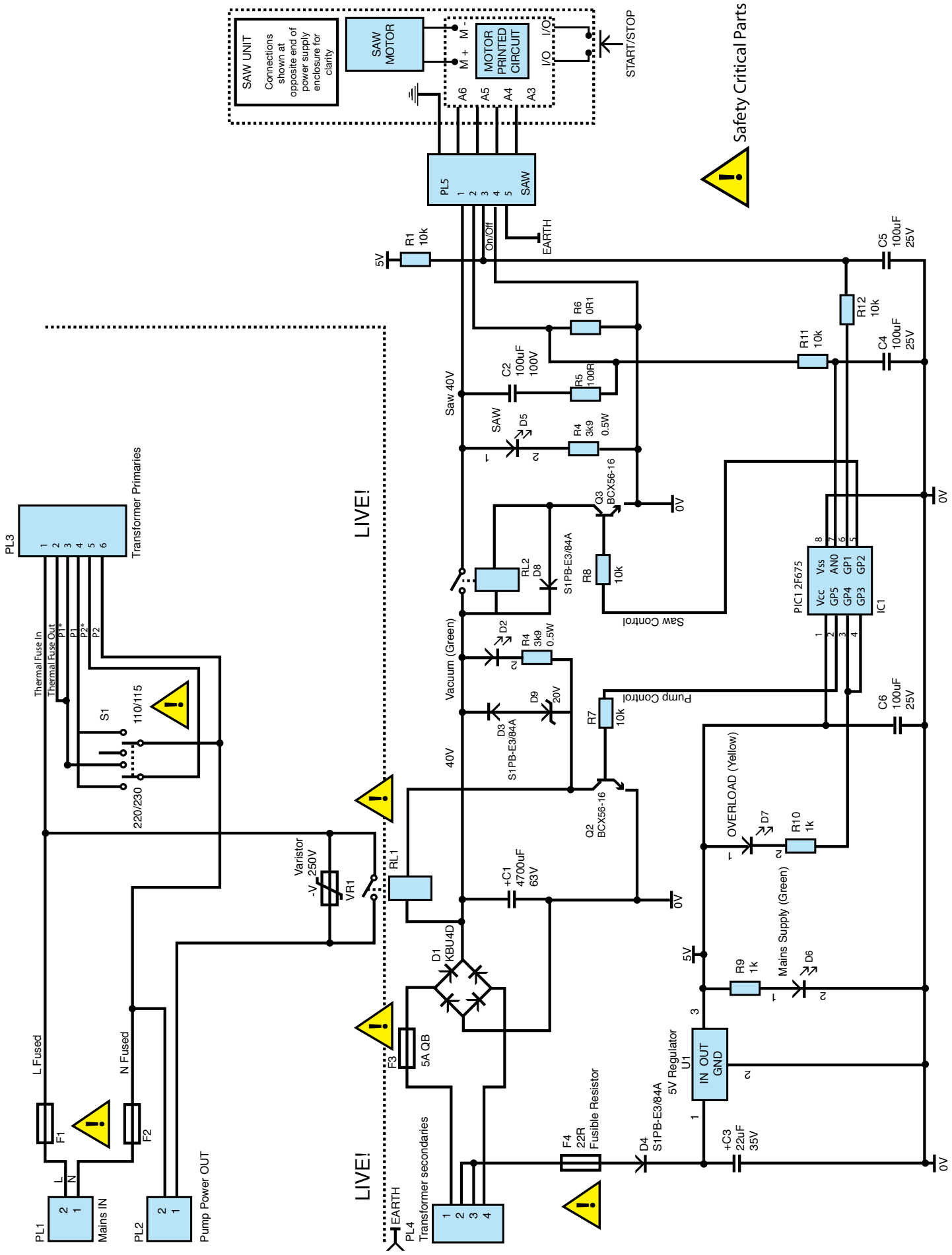

FILTER SERVICE RECORD

This page is provided to document your filter service history to meet the requirements of the C.O.S.H.H. legislation. Although the complete filter service kit includes Vacuum Cowellings and Paper Filters, provision for these are not included in the service record as they are regarded more consistent with the day to day servicing of the equipment.

1

Date of Service .....

Signed .....

Vaccum Pipe replaced ☐

Cloth Filter replaced ☐

Micron Filter replaced ☐

2

Date of Service .....

Signed .....

Vaccum Pipe replaced ☐

Cloth Filter replaced ☐

Micron Filter replaced ☐

3

Date of Service .....

Signed .....

Vaccum Pipe replaced ☐

Cloth Filter replaced ☐

Micron Filter replaced ☐

4

Date of Service .....

Signed .....

Vaccum Pipe replaced ☐

Cloth Filter replaced ☐

Micron Filter replaced ☐

5

Date of Service .....

Signed .....

Vaccum Pipe replaced ☐

Cloth Filter replaced ☐

Micron Filter replaced ☐

6

Date of Service .....

Signed .....

Vaccum Pipe replaced ☐

Cloth Filter replaced ☐

Micron Filter replaced ☐

7

Date of Service .....

Signed .....

Vaccum Pipe replaced ☐

Cloth Filter replaced ☐

Micron Filter replaced ☐

8

Date of Service .....

Signed .....

Vaccum Pipe replaced ☐

Cloth Filter replaced ☐

Micron Filter replaced ☐

9

Date of Service .....

Signed .....

Vaccum Pipe replaced ☐

Cloth Filter replaced ☐

Micron Filter replaced ☐

10

Date of Service .....

Signed .....

Vaccum Pipe replaced ☐

Cloth Filter replaced ☐

Micron Filter replaced ☐

CONDITIONS OF WARRANTY

Should the equipment covered by this warranty become inoperative because of defective material(s) or workmanship, Mopec will undertake at their own discretion to repair or replace it at no charge to the purchaser, subject to the following conditions :-

1 That the equipment has been used with care and shows no sign of abuse, neglect or accidental damage.
2 That the equipment has only been used for the purpose(s) for which it was designed.
3 That the preventive maintenance has been performed in accordance with the manufacturer's instructions.
4 That no attempt to repair or dismantle any part of the equipment has been made, except by a Mopec representative or an appointed agent of Mopec.
5 That any claim for repair or replacement be made within one calendar month of the problem arising.
6 The conditions of this warranty remain in force for a period of twelve months from the date of purchase.
7 This warranty does not affect your statutory rights.

The policy of Mopec is one of continuous product development, and ensuring our customers the best possible service. To achieve this, specifications and details may be subject to change without prior notice.

Equipment owners outside the United States should consult the distributor/agent from whom they purchased the equipment regarding spare parts and repair facilities.
The distributor/agent will advise on the best course of action to take.

CERTIFICATE OF ELECTRICAL TEST

The following tests have been performed with UT 520 portable appliance tester and apply only to the combination of equipment whose serial numbers are identified as being supplied against this warranty.

Earth bond test	5V pass less than 0.2ohm
Insulation test	500V dc greater than 1mohm
Leakage	40V rms less than 0.75mA

Tested by _____ Dated _____

Purchased by _____ Dated _____

EQUIPMENT RATINGS

Equipment	Serial No.	Supply Voltage	Auxiliary Socket Output
5000 Power Supply		V-50/60HZ 75VA	V-50/60HZ 750 W
5000 Saw Unit		40V ⎓	Not Applicable
5000 Filtration Unit		V-50/60HZ 750 W	Not Applicable

TECHNICAL INFORMATION

Power Supply

Transformer manufactured to IEC – EN60742
Output – Saw 40 VDC
Enclosure –to IEC529, DIN40050
Protected to IP65
Protection- Electronic Current Limiting
Device Double Pole Fused
Constructed –to IEC60601-1
Weight 1.7kg
Input voltage – 230Vac or 110 Vac
Cable 4.0m fitted

Hand Piece

Motor –DC Permanent magnet
Speed –no load 13200 cycles per min
Current – no load 40Vdc 0.75amp
Typical load 1.5 amps
Construction – Anodised Aluminium body with
5 bearing sealed mechanism
Protected to – IP67
Audio Output – 37 dB (A) no blade

Vibration Value – 4.12 m/s^2
Weight – 1.3kg

Technical Requirements

93/42/EEC
IEC/EN 60601-1
EMC 2004/108/EC

2002/289

Better By Design™